LET	ALTERATION	DATE	BY	LET	ALTERATION	DATE	BY
A	ADDED 3 RECORDS MADE ADDED NOTE "SEE SHEET 2" AS SHOWN (SHEET 2) ADDED (2) DASH NO. FOR ASSY.						
B	PER E.C.N. 7 ADDED Q1801-105, Q1801-110, AC225-3 ADDED AC223-1, AC223-2, AC223-3, ADDED SEE NOTE ON PAGE REPLACED CALL-OUT ACROSS 3 PLACES WITH NOTE. ADDED Q1801-20, ON AC223-3 3 PLACES. NO WT. CHG.	8-24-49	HOPKE				

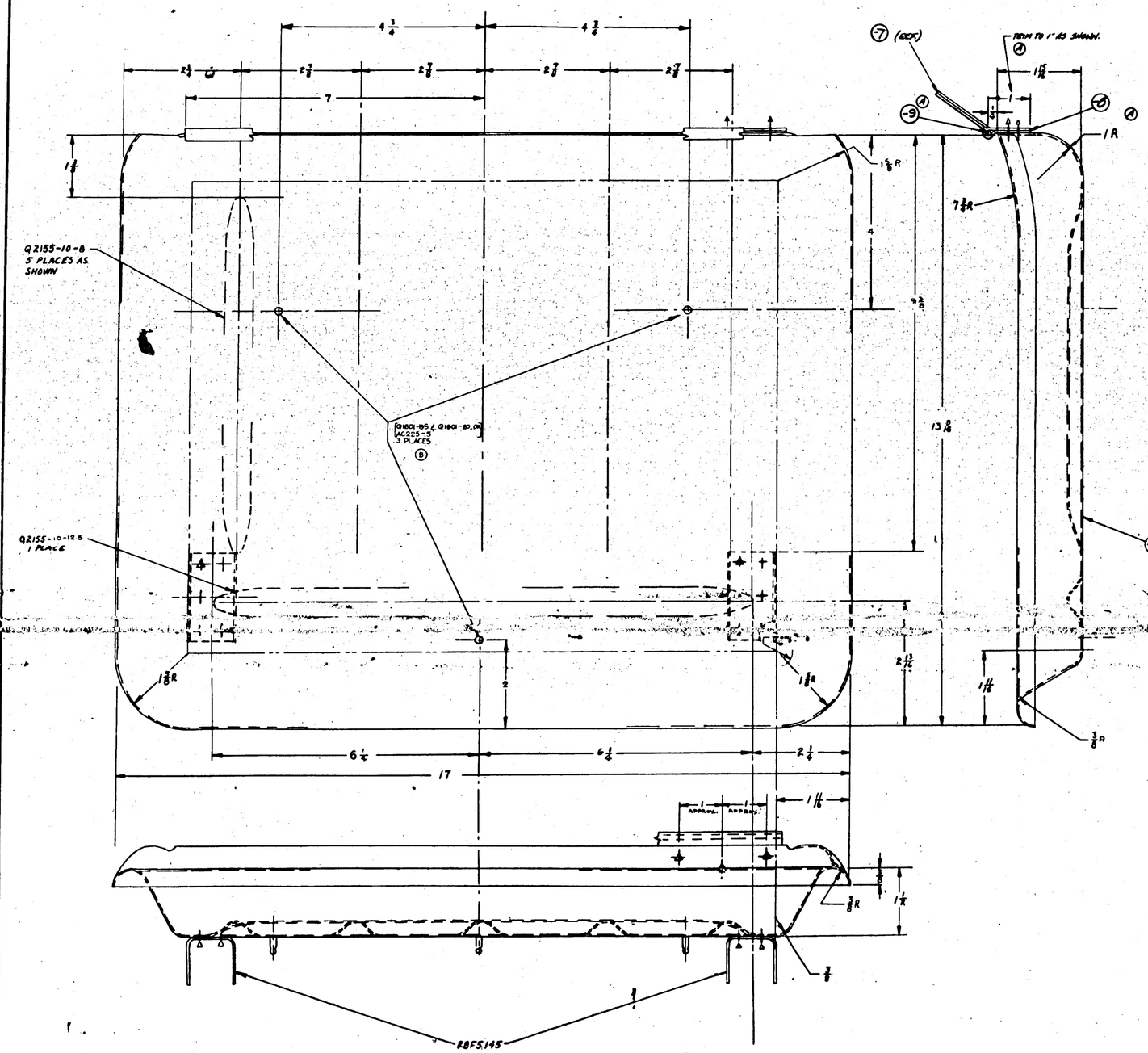

Q1801-20	(SEE NOTE)	
Q1801-105	(SEE NOTE)	
AC 223-3	(SEE NOTE)	
28F5146		R

FINISH CODE	
S	[illegible]
P	[illegible]
AP	[illegible]
C	[illegible]

28-3MK	7/8/37	2
28-3MK	8/13/37	2
28-3MK	8/23/37	2
28-3MK	10/5/37	2
28-3MK	[illegible]	2
28-3MK	[illegible]	2
28-3MK	[illegible]	2

LINE NO.	MODEL	FIRST ASSY	NO.
	REQUIREMENTS FOR AIRPLANE		
INCLUDED		2.7	
		Dwg. Ch.	
INCLUDED BY		OP. CH.	
DATE	SCALE		
7-22	12"=1'-0"		

PART NO.	SPECIFICATION	MATERIAL	SIZE	LH	RH	LH	RH	LH	RH	LH	RH
				REQ	REQ	REQ	REQ	REQ	REQ	REQ	REQ
-9	[illegible]	[illegible]	22 WG Normal								
-8	[illegible]	ALCLAD									
-7	[illegible]	ALCLAD									
-6	[illegible]	ALCLAD	ALCLAD A								

PARTS LIST PER ASSY. -0 -8 -9 -4 -6

A-C			
NAVY	2-P-2AP	7/10/44	
HEAT TREAT	FINISH	7/10/44	

NAME SEAT — FURNS WAIST GUNNERS

CONSOLIDATED AIRCRAFT CORP. San Diego, Calif.

SIZE J — DWG. 28F5138

CONTRACT CHANGE "J"
50.936-17
INSTALLED BY C.A.C. TO START WITH #36 PBY-5 AIRPLANE.
PARTS TO BE FURNISHED BY C.A.C. & INSTALLED BY NAVY ON AIRPLANES #1 TO 34 INCL.

H 323

R